MADII SIX ARRIVAL (RNAV) Arrival Routes

CHICAGO APP CON
119.0 292.125
D-ATIS
135.4 282.225

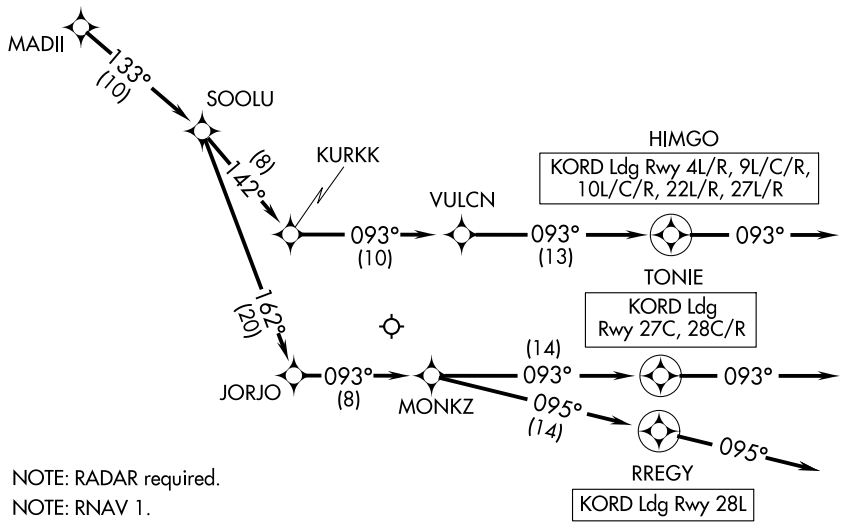

NOTE: RADAR required.

NOTE: RNAV 1.

NOTE: DME/DME/IRU or GPS required.

NOTE: ORD Landing east: Expect RADAR vectors to final approach course after MADII.

NOTE: Chart not to scale.

ARRIVAL ROUTE DESCRIPTION

From MADII on track 133° to SOOLU.

LANDING RUNWAY 4L/R, 9L/C/R, 10L/C/R, 22L/R, 27L/R: From SOOLU on track 142° to KURKK, then on track 093° to VULCN, then on track 093° to HIMGO, then on track 093°. Expect RADAR vectors to final approach course.

LANDING RUNWAY 27C, 28C/R: From SOOLU on track 162° to JORJO, then on track 093° to MONKZ, then on track 093° to TONIE, then on track 093°. Expect RADAR vectors to final approach course.

LANDING RUNWAY 28L: From SOOLU on track 162° to JORJO, then on track 093° to MONKZ, then on track 095° to RREGY, then on track 095°. Expect RADAR vectors to final approach course.