ILS or LOC RWY 24
ELMIRA/CORNING RGNL (ELM)

LOC I-ELM	APP CRS	Rwy ldg	7799
109.1	242°	TDZE	955
		Apt Elev	955

RADAR required to define ERINN. RNAV 1-GPS required from MAP to UNOLY. RNAV-1 GPS required for procedure entry. ADF or RADAR required.

Circling NA for Cat D south of Rwys 10 and 28. Inop table does not apply to S-LOC 24 Cats C/D. Circling NA to Rwys 5 and 23. Circling Rwy 10 NA at night. For inop ALS increase S-ILS 24 all Cats visibility to RVR 6000.
** S-ILS 24 RVR 1800 authorized with use of FD or AP or HUD to DA.

-22°C

MALSR

MISSED APPROACH: Climb to 4000 direct UNOLY/RADAR and hold.
** Missed approach requires minimum climb of 260 feet per NM to 2400.

ATIS	ELMIRA APP CON *		ELMIRA TOWER *	GND CON	CLNC DEL	UNICOM
125.475	128.425	257.8	121.1 (CTAF) L 257.8	121.9	121.9	122.95

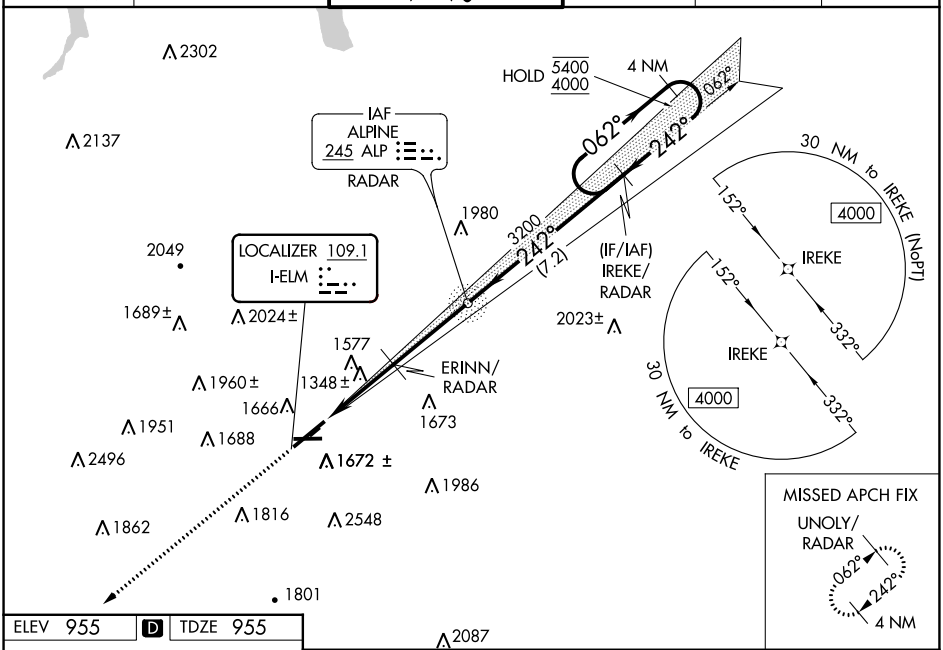

ELEV 955 D TDZE 955

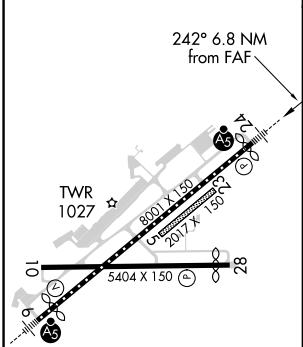

HIRL Rwy 6-24 L
MIRL Rwy 10-28

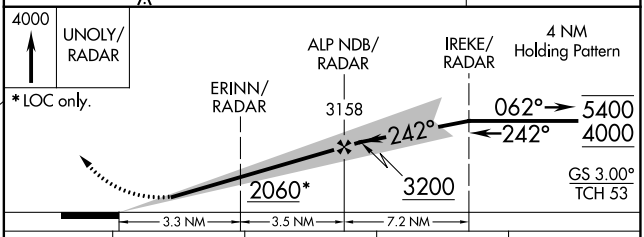

CATEGORY	A	B	C	D
S-ILS 24 **	1155/24 200 (200-½)			
S-ILS 24	1340/35 385 (400-⅝)			
S-LOC 24	2060/40 1105 (1200-¾)	2060/55 1105 (1200-1)	2060-3 1105 (1200-3)	
C CIRCLING	2060-1¼ 1105 (1200-1¼)	2080-1½ 1125 (1200-1½)	2100-3 1145 (1200-3)	2340-3 1385 (1400-3)
	ERINN FIX MINIMUMS			
S-LOC 24	1600/24 645 (700-½)		1600-1⅜ 645 (700-1⅜)	
C CIRCLING	2020-1¼ 1065 (1100-1¼)	2080-1½ 1125 (1200-1½)	2100-3 1145 (1200-3)	2340-3 1385 (1400-3)

FAF to MAP 6.8 NM					
Knots	60	90	120	150	180
Min:Sec	6:48	4:32	3:24	2:43	2:16

NE-2, 23 MAR 2023 to 20 APR 2023