VOR RWY 13
COZAD MUNI (CZD)

VOR OZB	APP CRS	Rwy ldg	5000
109.0	123°	TDZE	2503
		Apt Elev	2503

Use Lexington altimeter setting; when not received, use North Platte altimeter setting and increase all MDAs 80 feet, increase Circling Cat C visibility ¼ SM. Circling NA to Rwys 18 and 36. Rwy 13 helicopter visibility reduction below ¾ SM NA.

MISSED APPROACH: Climb to 4500 then right turn direct OZB VOR and hold.

LXN AWOS-3	DENVER CENTER	UNICOM
121.025	132.7 226.675	122.8 (CTAF) L

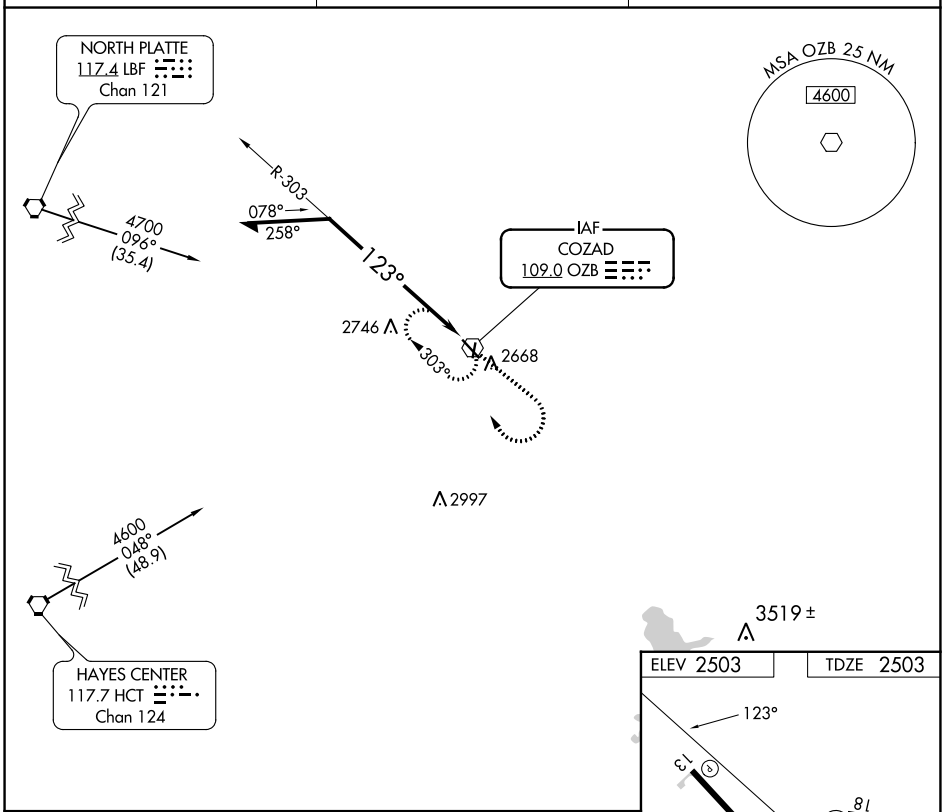

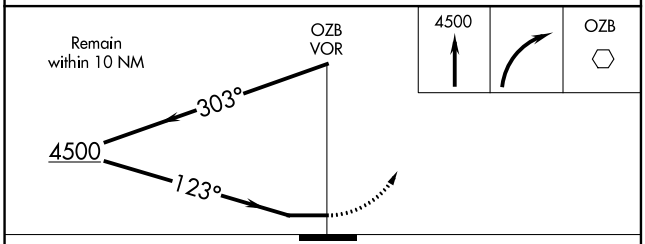

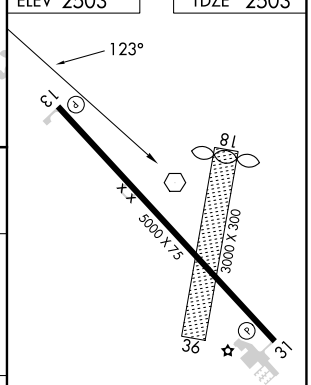

CATEGORY	A	B	C	D
S-13	3140-1	637 (700-1)	3140-1¾ 637 (700-1¾)	NA
C CIRCLING	3140-1	637 (700-1)	3140-1¾ 637 (700-1¾)	NA

MIRL Rwy 13-31 L

NC-2, 30 NOV 2023 to 28 DEC 2023

NC-2, 30 NOV 2023 to 28 DEC 2023