VOR-A

FULLER (4D8)

VOR/DME SPW	APP CRS	Rwy ldg	N/A
115.15	005°	TDZE	N/A
Chan 98 (Y)		Apt Elev	1439

DME required. RADAR required for procedure entry.

T A NA — Circling NA to Rwys 18 and 36. Procedure NA at night. Use Spencer altimeter setting, when not received, use Estherville altimeter setting and increase all MDA 40 feet.

MISSED APPROACH: Climbing right turn to 3000 direct SPW VOR/DME and hold.

SPW ASOS	MINNEAPOLIS CENTER	CTAF
126.625	127.75 257.7	122.9

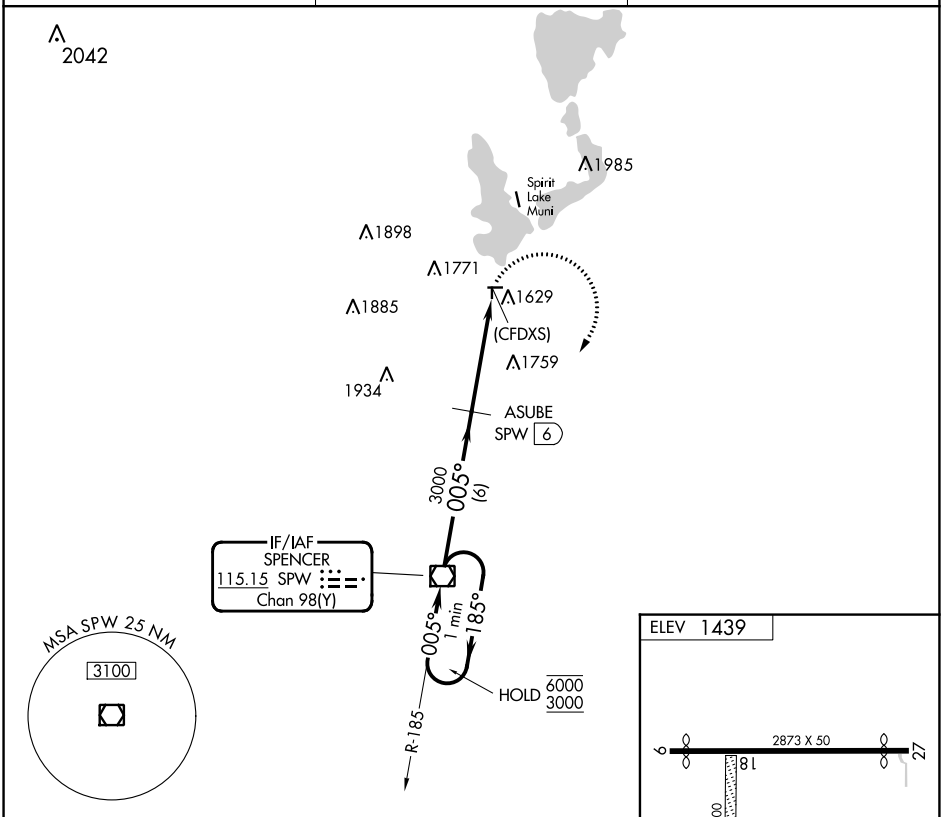

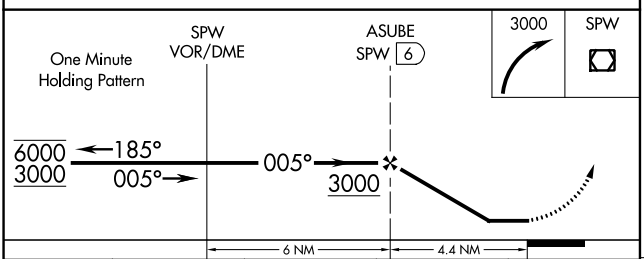

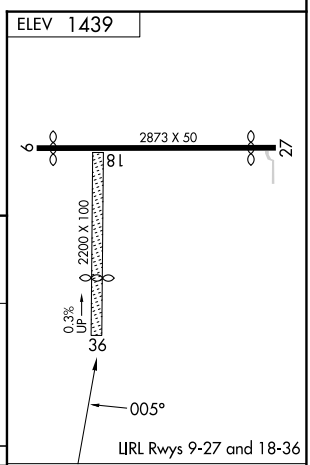

CATEGORY	A	B	C	D
C CIRCLING	2100-1 661 (700-1)		NA	

FAF to MAP 4.4 NM					
Knots	60	90	120	150	180
Min:Sec	4:24	2:56	2:12	1:46	1:28

NC-3, 08 AUG 2024 to 05 SEP 2024
NC-3, 08 AUG 2024 to 05 SEP 2024