LLRGO ONE DEPARTURE (RNAV)

TAMPA DEP CON
125.3 316.05
ATIS
134.5
CLNC DEL
120.6 350.2
GND CON
121.9 348.6
ST. PETERSBURG-CLEARWATER TOWER ★
118.3 (CTAF) 257.8

RNAV 1 - DME/DME/IRU or GPS.
RADAR required.

TOP ALTITUDE: 1600

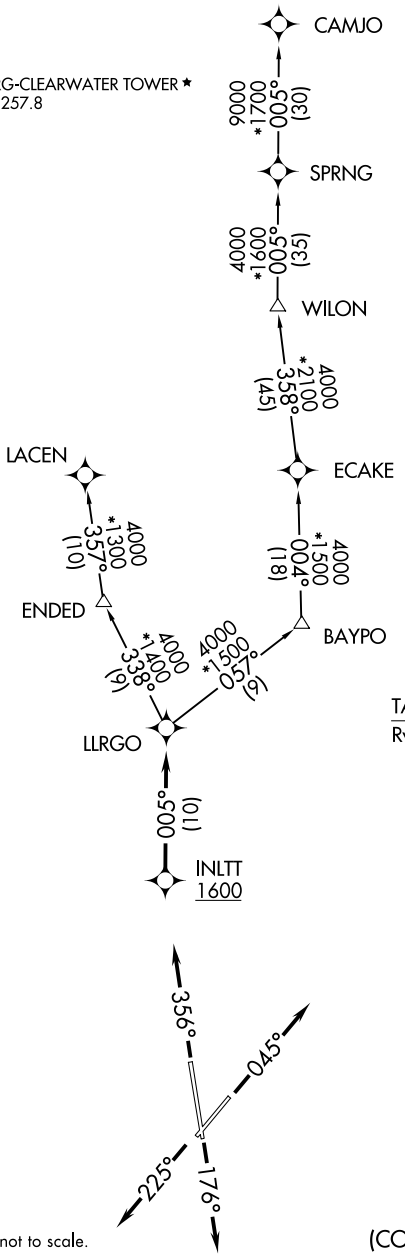

NOTE: For jets less than 60,000 lbs or as assigned by ATC.

TAKEOFF MINIMUMS

Rwys 4, 18, 36: Standard.
Rwy 22: 300-1⅛ or standard with minimum climb of 230′/NM to 300, or alternatively, with standard takeoff minimums and a normal 200′/NM climb gradient, takeoff must occur no later than 1700′ prior to DER.

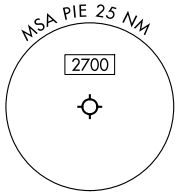

NOTE: Chart not to scale.

(CONTINUED ON FOLLOWING PAGE)