APP CRS	Rwy ldg	2578
242°	TDZE	7
	Apt Elev	7

RNAV (GPS) RWY 24
MONTAUK (MTP)

RNP APCH - GPS.

Helicopter visibility reduction below 1 SM NA. Use Groton-New London altimeter setting; when not received, use Block Island State altimeter setting: increase all MDA 20 feet and visibility LNAV Cats C and D ⅛ SM and Circling Cats D ¼ SM. Procedure NA at night.

NA

MISSED APPROACH: Climb to 600 then climbing left turn to 2500 direct CUTUX and hold.

GON ASOS	NEW YORK APP CON	UNICOM	
127.0	125.975 343.65	122.7 (CTAF)	121.7 L

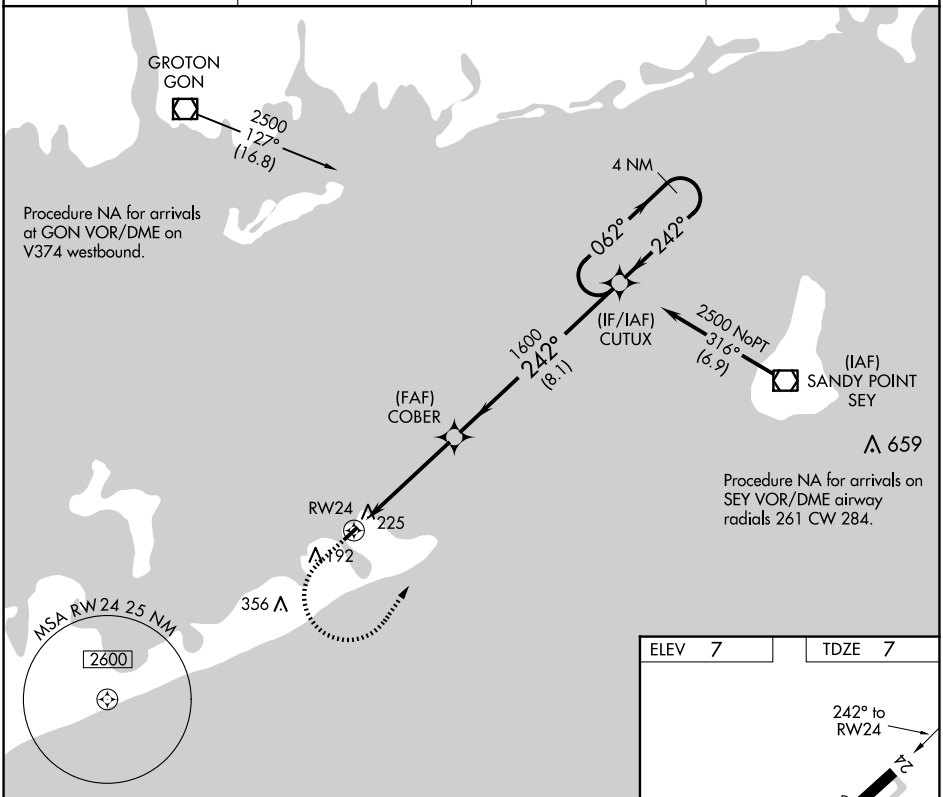

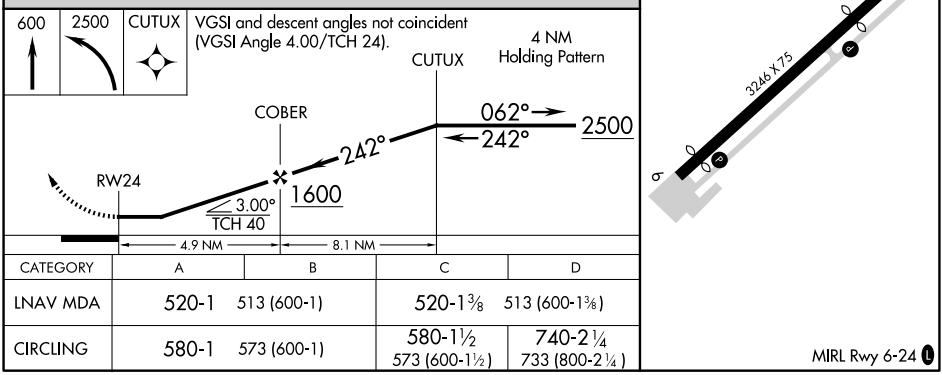

CATEGORY	A	B	C	D
LNAV MDA	520-1	513 (600-1)	520-1⅜	513 (600-1⅜)
CIRCLING	580-1	573 (600-1)	580-1½ 573 (600-1½)	740-2¼ 733 (800-2¼)

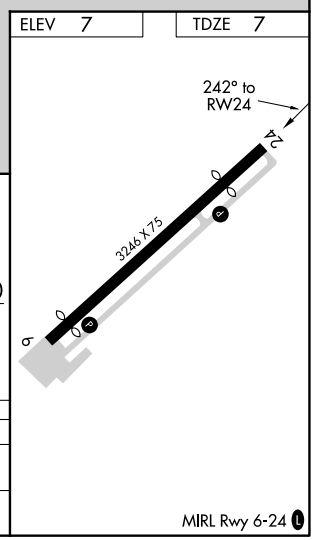

NE-2, 15 MAY 2025 to 12 JUN 2025