WAAS CH 93510 W29A	APP CRS 296°	Rwy Ldg 6501 TDZE 718 Apt Elev 722

RNAV (GPS) RWY 29
COLES COUNTY MEML (MTO)

RNP APCH.

Circling NA to Rwys 18 and 36. For uncompensated Baro-VNAV systems, LNAV/VNAV NA below -19°C or above 54°C. For inop ALS, increase LNAV/VNAV all Cats visibility to ⅞ SM and increase LNAV Cat C/D visibility to 1 SM.

MALSR

MISSED APPROACH: Climb to 2000 then climbing right turn to 3000 direct ZARIR and hold.

ASOS	CHAMPAIGN APP CON ★	UNICOM
118.475	132.85 290.225	122.7 (CTAF) L

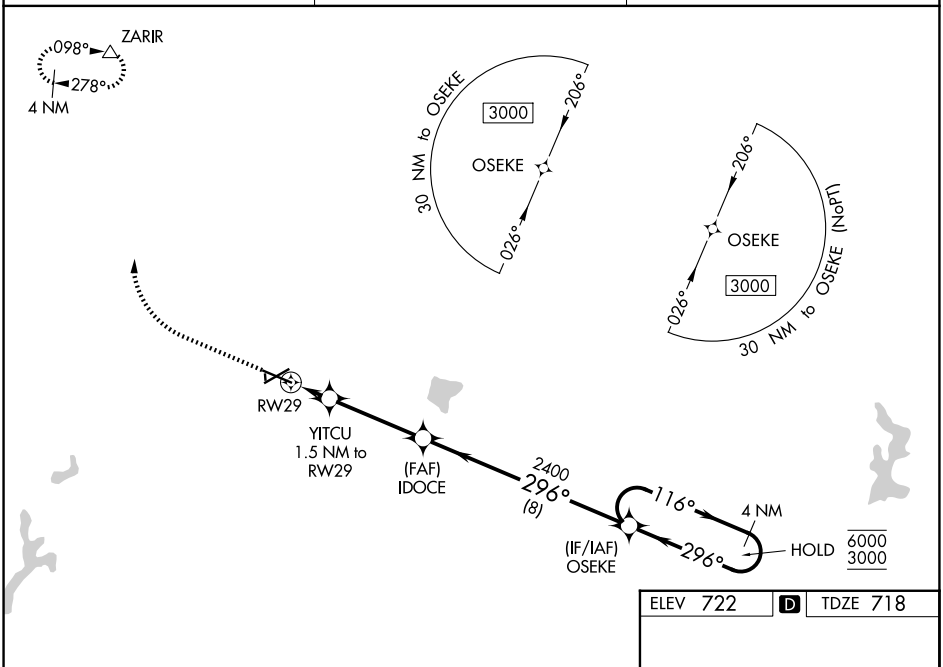

ELEV 722 D TDZE 718

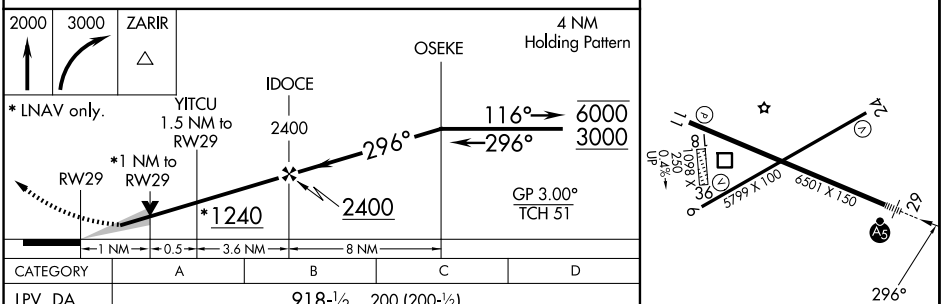

CATEGORY	A	B	C	D
LPV DA	918-½ 200 (200-½)			
LNAV/VNAV DA	1014-½ 296 (300-½)			
LNAV MDA	1080-½ 362 (400-½)		1080-⅝ 362 (400-⅝)	
CIRCLING	1160-1 438 (500-1)	1180-1 458 (500-1)	1240-1½ 518 (600-1½)	1380-2 658 (700-2)

MIRL Rwy 6-24 L
HIRL Rwy 11-29 L
REIL Rwys 6, 11, and 24 L

EC-3, 22 JAN 2026 to 19 FEB 2026